International Journal of Scientific Research & Engineering Trends
Volume 8, Issue 3, May-Jun-2022, ISSN (Online): 2395-566X

Hearing aid using Reverse Piezoelectric Effect

M Prithvi Raj, Nikhil V, Prashanth Manoj, Tushanth L, Ms Manasa S
Department of Electronics and Communication
AMC Engineering College (Affiliated to VTU)
Bangalore, India
pruthviraj232000@gmail.com, nikhilv8199@gmail.com, prashanth149200p@gmail.com
, tushanthcool@gmail.com, manasa.srinivas@amceducation.in

Abstract - The hearing device described in this study uses reverse piezoelectric technology and differs from conventional hearing aids in a number of ways. Sound waves are transmitted to the three major bones by bone conduction (Malleus, Incus, Stapes). Electrical pulses are converted into mechanical stress using piezoelectric transducers (vibrations). The goal is to create a low-cost gadget that does not require implants. We concentrate on talking about the construction and operation of hearing aids.

Keywords- Hearing Aid, Piezoelectric Effect, Bone Conduction, Implant, low cost.

INTRODUCTION

Hearing or auditory perception is the ability to perceive sound by detecting vibration changes in the surrounding medium's pressure over time through an organ such as the ear. When sounds can't get through the outer and middle ear, it's called conductive hearing loss. Soft sounds may be difficult to hear. It's possible that louder noises will be muffled. The capacity of certain materials to generate an electric change in response to applied mechanical stress is known as the piezoelectric effect. Bone conduction hearing is said to be the most natural means of stimulating the cochlea. Sound vibrations are conveyed through the skull bone to the Malleus and the other two bones via Bone ConductionPatients with conductive or mixed hearing impairments who are unable to wear AC hearing aids can use both conduction devices instead.

Piezo electric hearing aids provide a unique benefit for radio communication systems by allowing sound to pass through bones while the ears stay open to provide access to surrounding sounds or blocked to block out ambient noise.
It is well understood how normal hearing perception works. The outer ear picks up acoustic impulses or sound waves, which are subsequently conveyed to the inner ear. As a result, the auditory nerve generates a nerve impulse that is relayed to the brain. The classic hearing aid works on the idea that sound is amplified and delivered into the auditory meatus from the outside, stimulating the eardrum. These aids have a limited frequency range as well as a limited dynamic range of intensity.

Hearing loss, particularly impairments of the inner ear, causes significant communication difficulties for those affected. Hearing deficits are difficult to correct for, so that hearing aids must work well. Hearing aid technology has advanced dramatically in the last two decades, thanks to the introduction of digital hearing aids and the development of sophisticated audio signal processing algorithms.

II.OBJECTIVE

The project aim is to design a device integrated with non-invasive bone conduction technique which is capable to provide voice enhancing for hearing impaired people and to provide it an affordable cost.

III.LITERATURE SURVEY

There are lots of Hearing aids available in the modern era , a few of them are listed below:

1. Earphones (ITE)
Hearing aids are devices that help people hear better. ITE aids are custom-fit and worn in the ear canal. They are made from an impression obtained by your hearing care specialist during your hearing aid appointment. To fit in with the outer ear, these styles are usually offered in a variety of skin tones. Some ITE hearing aids are designed to fit deep within the ear canal, while others are designed to fit closer to the outer ear.

2. Earphones (behind the ear) (BTE)
BTE hearing aids sit behind or on top of the outer ear, with tubing running down into the ear canal via a custom-fit earmold or a dome style that doesn't completely cover the ear canal opening. BTE designs come in a variety of hues to match your hair.
The main styles of Hearing Aids are:

- In-the-ear styles
- Invisible in the canal (IIC)
- Completely in the canal (CIC)
- Behind-the-ear styles
- Receiving in the ear
- Behind the ear with earmold

3.Invisible in the canal (IIC)

Because of how they sit inside the ear, IIC headphones are incredibly discreet and have good sound quality.

The disadvantages include its susceptibility to ear wax and moisture damage, as well as its small size, which can make dexterity difficult. Furthermore, connecting to wireless devices such as cellphones can be hampered by their small size.

4. Completely in the canal (CIC)

CIC has the advantages of being discrete, having a longer battery life, and having more features than IIC and CIC.

The disadvantages are as follows: More occlusion, which can make wearers feel stuffed up. Susceptible to ear wax and moisture damage.

5.Receiver in the ear (RITE)

The benefits include: Generally, the only design that has a rechargeable battery option and is most likely to include wireless connectivity to devices such as phones and advanced technology like as artificial intelligence, and the speaker may be replaced individually.The disadvantages are as follows: Speaker, which is inside the ear, is sensitive to moisture and ear wax damage, therefore smaller RITE sizes can be a concern for dexterity. Behind the ear, the microphone and sound processor are visible.Components Used and their uses

6.Piezoelectric transducer : Piezoelecctric sensing

The piezoelectric effect is the ability of a piezoelectric substance to transform mechanical stress into electrical charge. The term "piezoelectric" comes from the Greek word "piezein," which means "to push, press, or squeeze." The piezoelectric action is reversible, and we get an electrical charge at the output. When we apply an electrical charge to a sensor, it stretches or compresses.

The piezoelectric effect of piezoelectric materials is used in piezoelectric sensing. When a force is exerted across the face of a piezoelectric film, an electrical charge shift occurs. If t is the thickness of a piezoelectric disc, When the electrode disc is stressed (Y), the voltage V created across it is

V =gtT (1)

Figure 1 Piezoelectric Transducer

7.PAM Module : Modulator

A 3W class-D amplifier, the PAM 8403. It achieves excellent quality sound reproduction thanks to its low THD+N. By eliminating the need for low pass output filters thanks to the new filter-less architecture, system costs and PCB space are reduced. The PAM8403's efficiency is significantly higher than that of its Class-AB counterparts with the same amount of external components. Due to its ability to increase battery life, it is ideal for portable applications like hearing aids and other devices. The SOP-16 package for the PAM8403 is available.

Figure 2 PAM 8403.

8.Battery : Power Source

An electrical device can be powered by a battery, which is a source of electric power made up of one or more electrochemical cells with an external connection. Batteries are available in a wide variety of sizes and shapes, from tiny cells used to power hearing aids and wristwatches to enormous battery banks the size of rooms that provide backup power for telephone exchanges and emergency data centres.

Figure 3 3.7V 500mah Battery.

9.TP4056 : Charging Unit

For single cell lithium-ion batteries, the TP4056 is a whole constant-current/constant-voltage linear charger. The TP4056 is perfectly suited for portable applications thanks to its SOP package and low external component count. It can also be used with a wall adapter and USB.

Figure 4 TP4056.

10. Microphone: Sound Input

A transducer, such as a microphone, transforms sound into an electrical signal. Numerous devices, including cellphones, hearing aids, public address systems for concert halls and public gatherings, motion picture production, and megaphones, use microphones. Before the signal can be captured or duplicated, microphones often need to be linked to a preamplifier

Figure 5 Mic.

IV.CIRCUIT DIAGRAM

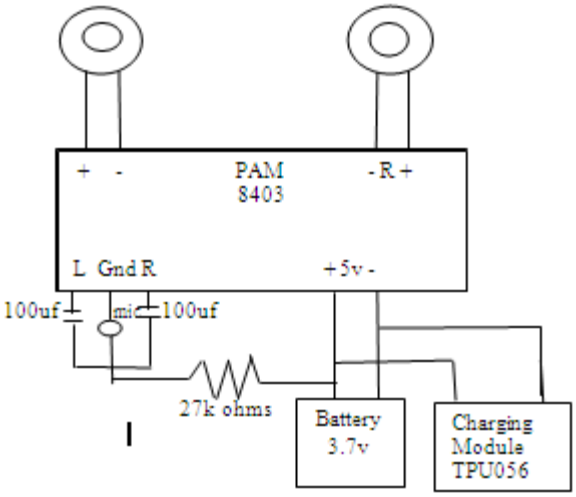

V. WORKING

The reverse piezoelectric effect is formed by applying electrical energy to make a crystal expand. The main function of this effect is to convert electrical energy into mechanical energy. When a voltage is applied to piezoelectric materials vibrations are developed. These vibrations are sent directly to the cochlea through bone conduction, bypassing the ear drum. The device which generates these vibrations performs the function of the ear drum. The vibrations will transmit directly to the middle ear where there are three small bones called malleus, incus, stapes. These bones together are known as ossicles. Their main function is to transmit sound waves to the inner ear. The surface of piezoelectric transducer, usually quartz, is coated with a thin layer of conducting material. When stress is applied the ions in the material move towards one of the conducting surfaces while moving away from the other. This results in the generation of charge. This charge is used for calibration of mechanical stress.

VI. BLOCK DIAGRAM

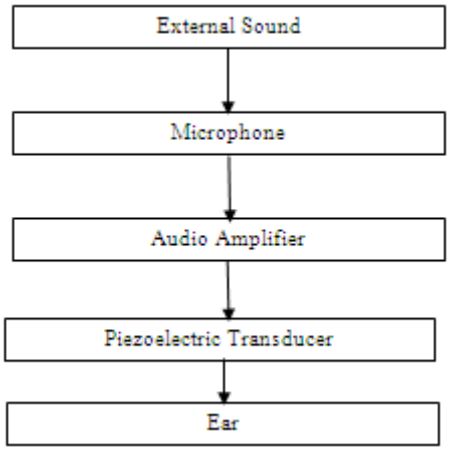

VIII.CONCLUSION

The design of the hearing aid is constructed and developed. A small actuator based on flex tensional structure was designed. The actuator implantation on stapes head was straightforward and the displacement transmitted from the actuator to the stapes footplate could benefit patients with mild to moderate sensor neural hearing loss. Using the reversible property of piezo and bone conduction a more affordable and comfortable hearing aid is devised with improved performance.

REFERENCES

[1]. Mudry A., Tjellström A. Historical background of bone conduction hearing devices and bone conduction hearing aids. Adv. Otorhinolaryngol. 2011; 71:1–9.

[2]. Tjellström A., Lindström J., Hallén O., Albrektsson T., Brånemark P.I. Osseointegrated titanium implants in the temporal bone. A clinical study on bone-anchored hearing aids. Am. J. Otol. 1981; 2:304–310.

[3]. Brånemark P.I., Hansson B.O., Adell R., Breine U., Lindström J., Hallén O., Ohman A. Osseointegrated implants in the treatment of the edentulous jaw. Experience from a 10-year period. Scand. J. Plast Reconstr. Surg. Suppl. 1977; 16:1–132.

[4]. Dun C.A.J., Faber H.T., de Wolf M.J.F., Cremers C.W.R.J., Hol M.K.S. An overview of different systems: The bone-anchored hearing aid. Adv. Otorhinolaryngol. 2011;71:22–31.

[5]. Stenfelt S. Acoustic and physiologic aspects of bone conduction hearing. Adv. Otorhinolaryngol. 2011; 71:10–21.

[6]. Stenfelt S., Goode R.L. Bone-conducted sound: Physiological and clinical aspects. Otol. Neurotol. 2005; 26:1245–1261. doi: 10.1097/01.mao.0000187236. 10842.d5.

[7]. Verstraeten N., Zarowski A.J., Somers T., Riff D., Offeciers E.F. Comparison of the audiologic results obtained with the bone-anchored hearing aid attached to the headband, the testband, and to the “snap” abutment. Otol. Neurotol. 2009; 30:70–75. doi: 10.1097/MAO.0b013e31818be97a.

[8]. Calon T.G.A., Johansson M.L., de Brujin A.J., Berge H.V.D., Wagenaar M., Eichhorn E., Janssen M.M., Hof J.R., Brunings J.-W., Joore M.A., et al. Minimally invasive ponto surgery versus the linear incision technique with soft tissue preservation for bone conduction hearing implants: A multicenter randomized controlled trial. Otol. Neurotol. 2018; 39:882–893. doi: 10.1097/MAO.0000000000001852.

[9]. Høgsbro M., Agger A., Johansen L.V. Successful loading of a bone-anchored hearing implant at two weeks after surgery: Randomized trial of two surgical methods and detailed stability measurements. Otol. Neurotol. 2015;36:e51–e57. doi: 10.1097/MAO.0000000000000647.

[10]. Høgsbro M., Agger A., Johansen L.V. Successful Loading of a Bone-Anchored Hearing Implant at 1 Week After Surgery. Otol. Neurotol. 2017; 38:207–211. doi: 10.1097/MAO.0000000000001312.