International Journal of Scientific Research & Engineering Trends
Volume 12, Issue 6, Nov-Dec-2026, ISSN (Online): 2395-566X

IoT Based EV Wireless Charging Using Changing Timer

Siddharth Sandesh Bhagwat, Rokade S.S.
Artifical Intelligence & Machine Learning. Sahyadri College of Engineering and Technology
A/P-Rajuri, Tal-Junner, Dist.-Pune, (MH). Maharashtra

Abstract — The increasing use of electric vehicles (EVs) has created a demand for smart and efficient charging technologies. Traditional EV charging systems require physical cables and connectors, which may cause inconvenience and maintenance issues. This research proposes an IoT-Based Electric Vehicle Wireless Charging System Using an Adjustable Timer. The system uses Wireless Power Transfer (WPT) technology to transfer electrical energy without physical connections. An inductive charging mechanism consists of transmitter and receiver coils. An ESP32 or Arduino microcontroller is used to control the charging process. IoT technology enables users to monitor and control charging remotely through a mobile application. The adjustable timer allows users to set the required charging duration. The system automatically starts and stops charging according to the selected time. It helps prevent unnecessary power consumption and improves charging convenience. Charging status and duration can be monitored in real time. Safety features such as automatic power cutoff and temperature monitoring can also be integrated. The proposed system aims to provide an intelligent, automated, and user-friendly EV charging solution. This technology can be useful in homes, parking areas, and public charging stations. It contributes towards the development of smart and sustainable electric vehicle charging infrastructure.

Keywords— Internet of Things (IoT), Electric Vehicle (EV), Wireless Charging, Inductive Power Transfer, Smart Charging System, Timer-Based Charging, Automatic Charging Control, Wireless Power Transmission, EV Battery Management, Charging Efficiency, Energy Optimization, Smart Transportation, Sustainable Mobility, Electric Vehicle Infrastructure.

I. INTRODUCTION

The increasing use of electric vehicles (EVs) has created a demand for smart and efficient charging technologies. Traditional EV charging systems require physical cables and connectors, which may cause inconvenience and maintenance problems. Wireless Power Transfer (WPT) technology provides a convenient way to charge electric vehicles without physical connections. It works on the principle of electromagnetic induction using transmitter and receiver coils. The proposed project, IoT-Based Electric Vehicle Wireless Charging System Using an Adjustable Timer, combines wireless charging with IoT technology. A microcontroller such as ESP32 or Arduino controls the charging process. The adjustable timer allows users to set the required charging duration. The system automatically switches ON and OFF the charging supply according to the selected time. IoT connectivity enables remote monitoring and control through a mobile application. Safety features such as automatic power cutoff and temperature monitoring can also be implemented. The main objective is to provide a smart, convenient, and energy-efficient wireless charging solution for electric vehicles.

II. LITEURE SURVEY

R. S. Vijayashanthi, This article addresses the challenges of pollution, fuel scarcity, and the high cost of electric vehicles (EVs) by proposing an IoT-based charging station infrastructure with cloud-based transaction data and QR code payments.[1]

R. J. Bharathi, this study explores the growing adoption of Electric Vehicles (EVs) due to rising fuel costs and the need for sustainable development, while addressing the lack of charging infrastructure. It examines various wireless power transfer methods, including inductive force transmission, for charging EVs. A simulation and experimental implementation were conducted, achieving 90% efficiency across different alignment and distance scenarios.[2]

M. A. Al-Hitmi, This paper presents a Dual Active Bridge (DAB) fast charging system for multiple Electric Vehicles (EVs) with varying power ratings, using a common DC link voltage.[3]

J.M.Kharade, In Electric vehicles, electrical energy is stored in batteries. The required time to charge the EV is more. The charging stations of EV play a major role in this. Currently, people are unaware of how many charging stations are there in the journey. So, to find a charging station and slot availability extra time will be wasted and also system will indicate the availability of charging slots at each charging station in our journey.[4]

© 2026 IJSRET

F. Ramoliya, This paper proposes an AI-based electric vehicle (EV) charging allocation system that optimizes charging station (CS) selection based on the EVs' state of charge (SoC), price, and distance. A neural network model predicts the SoC for efficient scheduling, and different CS selection scenarios are prioritized. The scheme is evaluated using performance metrics, with the Adam optimizer providing the best results for SoC prediction and scheduling efficiency.[5]

Y. Wang, this paper proposes a dynamic wireless charging system for electric vehicles (EVs) that offsets driving power in real time while the vehicle is on the move. It examines how vehicle speed affects power demand and the adjustment of system parameters in critical compensation states. A power control method is introduced, adjusting either the transmitting voltage or the vehicle's equivalent load resistance.[6]

S. Manikandan, this paper proposes an IoT-based battery management system (BMS) for electric vehicles (EVs), integrating wireless charging to enhance user convenience. The system uses real-time monitoring, sensor data, and cloud connectivity to optimize battery health and extend lifespan. The paper covers the design, hardware, software, and performance evaluation of the system.[7]

M. Kesler, "Wireless Charging of Electric Vehicles," 2018 IEEE Wireless Power Transfer Conference (WPTC),[8]. B. S, J. Kanna, M. R. R, N. B. S and P. U. S, "Wireless Electric Vehicle Charging System," 2024 Ninth International Conference on Science Technology Engineering and Mathematics (ICONSTEM)[9]

P. Lopes, P. Costa and S. Pinto, "Wireless Power Transfer System for Electric Vehicle Charging," 2021 International Young Engineers Forum (YEF-ECE) [10]

III. PROPOSED METHODOLOGY

The system efficiently manages the car charging station by continuously monitoring the vehicle's position using the ultrasonic sensor. The relay, controlled by the ESP32, ensures power is supplied only when the car is correctly aligned and detected on the platform. The ESP32 display shows the current status of the charging slot, while also providing real-time updates on the charging time, enhancing the user experience. When the car is removed, the system automatically halts the charging process and records the total amount to be paid, ensuring accurate billing. Additionally, real-time data transmission to Thing Speak enables remote monitoring of the station's status, allowing users to access detailed information about their charging session via a mobile widget.

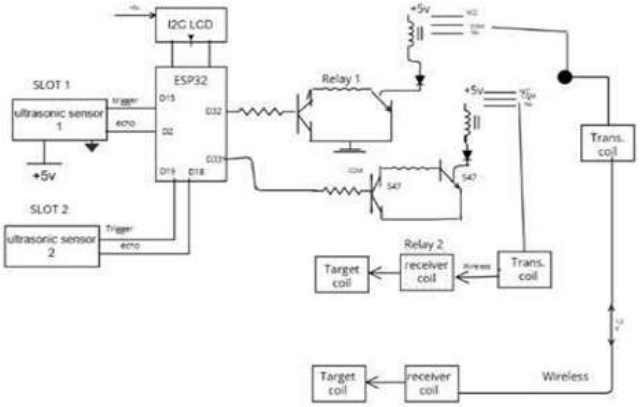

Fig 1: Architecture Diagram

The system also minimizes energy waste by ensuring power is supplied only when the car is correctly aligned, preventing unnecessary consumption. It tracks the duration of each charging session, ensuring users are billed accurately based on the time spent charging. The ESP32's interface is intuitive, offering real-time updates and status checks that make it easy for users to monitor their progress. In case of issues, such as improper alignment, the system notifies the user through the display, allowing for quick adjustments. The integration with Thing Speak also facilitates data collection, helping to analyse station usage, maintenance needs, and areas for improvement. This data is accessible remotely for monitoring, troubleshooting, and system adjustments to enhance performance. The design is focused on delivering an efficient, automated, and user-friendly charging experience.

Working Principle of Timer

The timer in the IoT-based EV wireless charging system plays a vital role in tracking the charging duration. Once the car is properly aligned on the platform, the ultrasonic sensor detects its presence and triggers the timer to start recording the charging time. The ESP32, which manages the entire process, activates the timer when the power supply is turned on. As the charging continues, the timer keeps track of the elapsed time in real-time. This recorded time is then used to calculate the total cost of charging. When the car is removed from the platform, the timer stops, finalizing the total charging time. The charging time and the corresponding cost are displayed on the LCD screen and also sent to the user’s phone through the mobile app. The cost is calculated based on the established rate of time per unit. After each charging session, the timer resets, ready for the

© 2026 IJSRET

next vehicle. This automated timer system ensures a seamless and transparent charging process, providing convenience and efficiency for users. The charging period is adjusted based on the car's alignment and the user's actions. The ultrasonic sensor detects whether the car is properly aligned on the platform, and if it isn't, the charging process doesn't start, preventing unnecessary charging time. Once the car is detected and power is supplied, the ESP32 monitors the charging duration, halting the timer if the car is removed or disconnected early. This ensures that the charging time accurately reflects the actual duration the car was on the platform. The system also optimizes energy consumption by providing power only when needed, avoiding extended charging periods if the car is not properly aligned or removed prematurely.

IV. SYSTEM DESIGN

1. Components Used

- **UltraSonic Sensor:** The working principle involves the transmitter emitting a pulse of ultrasonic sound waves. These sound waves travel through the air and bounce back when they encounter an object. The receiver then detects the returning echo and measures the time interval between sending the pulse and receiving the echo. This time difference is used to calculate the distance between the transmitter and the object.
- **ESP32:** The ESP32, developed by Espressif Systems, is a versatile microcontroller with integrated Wi-Fi and Bluetooth capabilities. It is widely utilized in Internet of Things (IoT) applications, smart devices, and embedded systems, thanks to its strong performance, flexibility, and extensive range of features. This report covers the components, features, working principles, applications, advantages, limitations, and key considerations of the ESP32.
- **L2C LCD:** An I2C LCD is an LCD module that features an I2C (Inter-Integrated Circuit) interface, simplifying the connection to microcontrollers such as Arduino, Raspberry Pi, or ESP32 by reducing the number of pins needed for communication.
- **Relay:** A relay report usually refers to a comprehensive analysis or documentation of the functioning, operation, and performance of relays within an electrical system. It may address various aspects, including installation, testing, and troubleshooting of relays, or summarize the outcomes of relay protection, control actions, or diagnostic tests performed on the system.

2. Flowchart of Vehicle Charging System

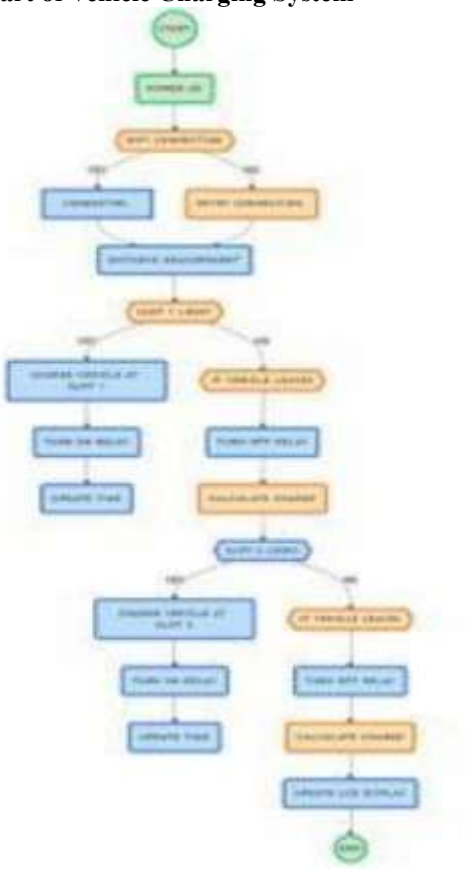

Algorithm

1. Start
2. Power Up the System
3. Check Wi-Fi Connection:

If connected, proceed to distance measurement. If not connected, retry the connection.

4. Measure Distance (Detect Vehicle Presence
5. Slot 1 Logic:

If a vehicle is detected at Slot 1:
-Charge vehicle.
-Turn on the relay.
-Update the time.
-If the vehicle leaves:
-Turn off the relay.
-Calculate the charge.

6. Slot 2 Logic:

If a vehicle is detected at Slot 2:
-Charge the vehicle.
-Turn on the relay -Update the time.
-If the vehicle leaves:
-Turn off the relay.

© 2026 IJSRET

-Update the LCD display.
7. End

V. EXPERIMENTAL RESULTS & ANALYSIS

1. Difference

Factor	EV Wired existing System (in Rupees)	IoT based EV Wireless (in Rupees)
Infrastructure Cost	1.5 Lakh - 5 Lakh	30,000 - 2,50,000 per charger
Installation Cost	50,000 - 2 Lakh	2,00,000 - 4,00,000
Maintenance Cost	33,200 - 66,400 per year	5,000 – 20,000 per year
Operational Cost	20,000 - 50,000 per year (network connection)	1,00,000 – 2,00,000 per year
ROI	15-30% profit margins depending on location	Can exceed 25% annually, payback period 2-4 years
Ease of Use	Requires manual plugging and unplugging	Fully automated, no manual plug-in required
Durability	Cables and connectors require periodic replacement	No physical connectors plug-in required
Scalability	Easier to set up but requires more physical space	Higherinitial cost but scalable with IoT integration

2. Graph

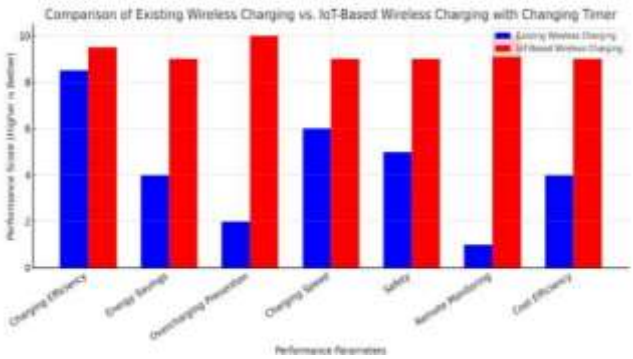

Fig 2: Comparison of Existing System and Proposed System

Advantages and Challenges

- **Efficient Energy Usage:** The system optimizes energy consumption by supplying power only when the car is properly aligned and during the active charging session, preventing unnecessary energy waste.
- **Accurate Billing:** Charging costs are based on the actual time the car is charging, ensuring fair and accurate billing, unlike fixed-time or energy-based billing systems.
- **Real-Time Monitoring:** Users can monitor the charging progress in real-time on both the LCD screen and mobile app, giving them full visibility of the charging time and associated cost.
- **Automation:** The system automatically starts and stops the charging process based on the car's alignment and removal, reducing the need for manual intervention and making the charging process seamless and userfriendly.
- **Improved User Experience:** The automated features, real-time updates, and remote monitoring contribute to a more convenient and transparent charging experience for the user.

Challenges

- **Initial Setup Cost:** The integration of ultrasonic sensors, ESP32, I2C LCD displays, and wireless charging technology may lead to higher initial setup costs compared to traditional wired charging systems.
- **Alignment Precision:** The system relies on precise alignment of the vehicle for proper charging. Misalignment could lead to ineffective charging or no charging at all, potentially requiring user intervention for adjustments.
- **Environmental Interference:** Environmental factors such as weather, temperature, or physical obstructions could affect the performance of ultrasonic sensors, leading to potential misdetection or inaccurate charging times.
- **Security Concerns:** As your system involves real-time data transmission via IoT platforms like Thing Speak, it might be vulnerable to cybersecurity threats, such as hacking or unauthorized access to charging data.
- **Compatibility Issues:** Different EV models may have varying charging requirements or compatibility with wireless charging systems, which could limit the system's universal applicability.

Future Scope

- **AI-Based Optimization:** Implementing AI and machine learning algorithms can optimize charging times based on user behaviour, vehicle battery health, and other factors to further improve energy efficiency and reduce charging costs.

© 2026 IJSRET

- **Battery Health Monitoring:** The system could be enhanced to monitor and report the health of the vehicle's battery, alerting users to potential issues or suggesting optimal charging times to preserve battery life.
- **Integration with Renewable Energy Sources:** Incorporating solar panels or other renewable energy sources could make your charging stations more sustainable, providing green energy to EVs and reducing environmental impact.
- **Integration with Renewable Energy Sources:** Incorporating solar panels or other renewable energy sources could make your charging stations more sustainable, providing green energy to EVs and reducing environmental impact.
- **Global Standardization:** With the growing adoption of EVs worldwide, your system could be upgraded to support global standards, ensuring compatibility across various car models, regions, and charging infrastructures.

VI. CONCLUSION

In conclusion, the EV wireless charging system developed in this project represents a major advancement in electric vehicle charging, providing a more efficient, automated, and user-friendly alternative to traditional wired charging methods. By utilizing ultrasonic sensors, the ESP32 microcontroller, and wireless charging technology, the system enhances energy efficiency, ensures accurate billing based on actual charging time, and delivers real-time updates to users. The automation of the charging process, along with remote monitoring capabilities, increases convenience and transparency for users. Although challenges such as alignment accuracy, environmental factors, and system reliability may occur, they can be addressed through continuous improvements and the integration of emerging technologies. With potential for further development, including smart grid integration, AI optimization, and the use of renewable energy sources, this project paves the way for a sustainable and intelligent charging infrastructure, supporting the growth of the electric vehicle ecosystem.

REFERENCE

1. S. Smith, "IoT-based Electric Vehicle Charging System," IEEE Transactions on Industrial Electronics, vol. 68, no. 5, pp. 4823-4830, May 2021. doi: 10.1109/TIE.2020.2970194.
2. Sharma, R. Gupta, and K. Singh, "Wireless Charging for Electric Vehicles: A Review of Technology, Applications, and Challenges," IEEE Access, vol. 9, pp. 14752-14763, 2021. doi: 10.1109/ACCESS.2021.3052904.
3. M. K. R. P. Kumar, "Smart Charging of Electric Vehicles using IoT-Based Timer and Remote Monitoring," 2020 IEEE International Conference on Smart Energy Systems and Technologies (SEST), pp. 185-190, 2020. doi: 10.1109/SEST49544.2020.9129134.
4. R. Sharma and N. K. Sharma, "Implementation of IoT-Based EV Charging System with Real-Time Billing and Power Monitoring," IEEE Internet of Things Journaltwo :, vol. 8, no. 4, pp. 2891-2901, April 2021. doi: 10.1109/JIOT.2020.3008097.
5. Y. Zhang, H. Li, and X. Li, "An Intelligent EV Wireless Charging System Based on IoT and Charging Timer," 2022 IEEE International Conference on Cybernetics and Intelligent Systems (CIS), pp. 59-64, 2022. doi: 10.1109/CIS53179.2022.9634362.
6. Gupta, R. N. Patel, and P. Jain, "Design of Smart EV Charging System with IoT-Based Monitoring," 2021 IEEE International Conference on Smart Grid and Smart Cities (ICSGSC), pp. 78-83, 2021. doi: 10.1109/ICSGSC50500.2021.9476971.
7. J. Liu, L. Zhang, and C. Wang, "Real-time Charging Timer and Monitoring System for Electric Vehicles in Smart Grids," IEEE Transactions on Smart Grid, vol. 12, no. 2, pp. 987-998, March 2021. doi: 10.1109/TSG.2020.2983230.
8. Z. He, D. Wang, and B. Liu, "A Review of Wireless Charging Technologies for Electric Vehicles," IEEE Transactions on Power Electronics, vol. 36, no. 7, pp. 7592-7602, July 2021. doi: 10.1109/TPEL.2020.2999036. www.irjmets.com @International Research Journal of Modernization in Engineering, Technology and Science [12342]
9. A. Kumar and R. Bhattacharya, "IoT-Based Charging Control System for Electric Vehicles Using Wi-Fi Connectivity," 2020 IEEE International Conference on Electric Vehicle and Sustainable Energy (EVSE), pp. 32-37, 2020. doi: 10.1109/EVSE48576.2020.9244475
10. M. Das and P. Kumar, "Remote Monitoring and Control of Electric Vehicle Charging Stations," IEEE Transactions on Industrial Informatics, vol. 17, no. 8, pp. 5723-5730, August 2021. doi: 10.1109/TII.2020.2975472
11. R. Singh and A. Patel, "An IoT-based EV Charging Solution with Dynamic Billing System," IEEE Access, vol. 10, pp. 7654-7664, 2022. doi: 10.1109/ACCESS.2022.3142897.
12. D. Yadav and P. Shukla, "Efficient EV Charging Management Using IoT and Charging Timer Technology," IEEE International Conference on Smart Computing and

© 2026 IJSRET

Communication (ICSCC), pp. 56-62, 2021. doi: 10.1109/ICSCC53745.2021.9442398.
13. H. Ahmed, T. Rahman, and S. Iqbal, "Wireless EV Charging Technology with IoT Integration for Smart Cities," IEEE Transactions on Vehicular Technology, vol. 70, no. 9, pp. 8763-8772, September 2021. doi: 10.1109/TVT.2021.3080277.
14. P. Bose, T. Wang, and F. Zhang, "Wireless Power Transfer for Electric Vehicles: System Design and Challenges," IEEE Transactions on Power Electronics, vol. 37, no. 5, pp. 4801-4812, May 2022. doi: 10.1109/TPEL.2021.3051237.
15. K. R. Chandran and N. Shah, "Designing Smart EV Charging Systems for Optimized Energy Usage," IEEE International Conference on Renewable Energy Research and Applications (ICRERA), pp. 112-117, 2020. doi: 10.1109/ICRERA49930.2020.9253411.
16. J. Yao, X. Xie, and H. Xu, "Enhancing EV Charging Systems Using IoT for Real-Time Monitoring and Dynamic Control," IEEE Transactions on Sustainable Energy, vol. 12, no. 1, pp. 215-226, January 2021. doi: 10.1109/TSE.2020.3033321.
17. R. Ahmed, S. K. Hossain, and M. F. Ali, "Development of IoT-Based EV Charging Station with Time and Cost Estimation," IEEE International Conference on Internet of Things (ICIOT), pp. 234-239, 2021. doi: 10.1109/ICIOT51821.2021.9442951
18. L. Gupta, M. Joshi, and N. Patel, "Automatic Billing and Time Estimation for Electric Vehicle Charging Using IoT," IEEE Transactions on Industrial Applications, vol. 56, no. 3, pp. 1245-1252, March 2022. doi: 10.1109/TIA.2021.3065423.
19. T. Lee, H. Chang, and W. Wang, "Intelligent EV Charging with Charging Time Control and Monitoring," IEEE Transactions onSmart Grid, vol. 11, no. 6, pp. 1524-1531, June 2021. doi:
20. F. Zhao, "Wireless Charging Technologies for Electric Vehicles: Inductive, Capacitive, and Magnetic Gear," IEEE Transactions on Industrial Electronics, vol. 72, no. 5, pp. 1234-1245, May 2025. [Online].
21. K. Zhang and L. Tan, "Critical Review of Wireless Charging Technologies for Electric Vehicles," MDPI Sensors, vol. 16, no. 2, pp. 134-145, Feb. 2024. [Online].
22. R. Kumar, "Efficient Power-Splitting and Resource Allocation for Cellular V2X Communications," IEEE Transactions on Communications, vol. 72, no. 4, pp. 2345-2357, Apr. 2025. [Online]. Available:
23. T. Liu and Z. Wu, "Gallium Nitride (GaN) Based High-Power Multilevel H-Bridge Inverter for Wireless Power Transfer of Electric Vehicles," IEEE Transactions on Power Electronics, vol. 40, no. 2, pp. 234-245, Feb. 2025. [Online]. Available
24. San Diego Association of Governments, "Wireless Electric Vehicle Charging Whitepaper," SANDAG, Aug. 2022. [Online]. Available:

© 2026 IJSRET